Session 3P6b
Electromagnetic Modeling, Inversion and Applications

GL EM Modeling for an Industrial and Art Scenery Design Model

Jianhua Li[1,2], **Ganquan Xie**[1], **Qing Xie**[1], **Lee Xie**[2], **Feng Xie**[2], **Y. J. Xie**[1], **Xinsheng Xie**[1], **and Y. Zhang**[1]

[1]Hunan Super Computational Sciences Center, China
[2]GL Geophysical Laboratoy, USA

Abstract— In the tradition theatrical stage scenery sets, many heave instruments devices and Manual body Labor were needed. If the stage scenery set is moved, the manual scenery Sets are needed to re installed. That is very inconvenience. In this paper, we propose a Global and Local (GL) new electromagnetic (EM) industrial and art scenery design model. Also, we use GL EM modeling to simulate the GL EM scenery in bridge and digit movies. The GL simulation present some advantages of the GL EM industrial and art scenery model over the traditional theatrical stage scenery.

Electromagnetic, Seismic, Heating, and Fluid Modeling and Inversion for Social and Natural Earthquake Dynamic

Ganquan Xie[1], **Jianhua Li**[1,2], **Qing Xie**[1], **and Xianwei Zhou**[3]

[1]Hunan Super Computational Sciences Center, China
[2]GL Geophysical Laboratory, USA
[3]University of Sciences and Technology, China

Abstract— There is four kind of earthquakes that are natural earthquakes, artificial physics earthquakes, social earthquake, artificial social earthquake in social and natural dynamic. Natural earthquake is the uncontrollable natural earthquake on the Earth and the planet, likes Tangshan, Wenchuan and Yiliang earthquake. Artificial physical earthquakes are controllable local earthquake that is caused by the discharge, and underground nuclear explosions detonated, exciting, Artificial physical seismic is effective method for the geophysical exploration and oil exploration. MRI, EKG and ultrasound medical examination and nondestructive testing and physical to explore are artificial micro seismic method. Social earthquake includes foreign aggression, domestic revolution, unrest and coups. Germany Hitler and Japan launched the Second World War is the destruction social earthquake for all mankind social. The Chinese historical peasant uprising and the world revolution and coup are social earthquake of collapse, the social earthquake is not controllable. Analog controllable artificial physical earthquake, controllable artificial social earthquake is existence in logic and are actually there. National political reform, reform, improvement, constitutional monarchy, Japan Minzhi only new are controllable the artificial societies earthquake. However, a large-scale and intense artificial social earthquake with "rebel" slogan launched by the ruler himself are relatively rare in history. "Chairman Mao launched the Cultural Revolution" is a wide range of controllable artificial social earthquake. This unrest known as the "Cultural Revolution" in history there will be long-term impact. Earthquake includes felt earthquakes and No sense of the seismic and micro seismic. Felt earthquakes is divided into the destruction of the earthquake and no destruction of the earthquake. MRI, EKG and ultrasound micro without destruction of the earthquake. Tangshan, Wenchuan and Yiliang earthquake are uncontrollable destructive natural earthquake. The reform and opening up is harmonious and constructive controllable artificial social earthquake. The Cultural Revolution is controllable social earthquake, but it is social artificial earthquake with the destructive. Therefore, a new research project is a GL EM, Scismic, Heating, and Fluid joint inversion for natural earthquakes, artificial physical earthquakesocial earthquake, artificial social earthquake.

Three-dimensional Controlled-source Electromagnetic Finite Element Modeling Using A-Φ Method

Bo Han, Xiangyun Hu, and Guiju Wu
Institute of Geophysics and Geomatics, China University of Geosciences, Wuhan 430074, China

Abstract— During the last few decades, the numerical solutions of the controlled-source electromagnetic (CSEM) induction problems, which are widely applied in geophysical prospecting, have received a lot of attention. In this paper, we describe a finite element approach for 3D CSEM modeling in the frequency domain. The electric field $\mathbf{E}$ is decomposed into magnetic vector potential $\mathbf{A}$ and electric scalar potential $\mathbf{\Phi}$ with a Coulomb gauge condition $\nabla \cdot A = 0$, and we solve the Maxwell's equations in terms of $\mathbf{A}$ and $\mathbf{\Phi}$ based on nodal elements. In comparison with those methods which directly calculate electric field $\mathbf{E}$ and magnetic field $\mathbf{H}$, the $\mathbf{A}$-$\mathbf{\Phi}$ method is much easier to guarantee the continuity of the tangential field components across material interfaces when nodal elements are employed. A Galerkin method is used to derive the system of equations for the Coulomb-gauged potentials. Since the resulting linear system is large, sparse and asymmetrical, the iterative quasi-minimal residual (QMR) algorithm is regarded as an adequate solver. We demonstrate the validity and efficiency of our method in several numerical experiments.

Temporal Orthogonal Projection Inversion Technique for EMI Sensing of UXO

Lin-Ping Song[1], **Douglas W. Oldenburg**[1], **Leonard R. Pasion**[2], **Stephen D. Billings**[2], **and Laurens Beran**[2]

[1]Department of Earth and Ocean Sciences, University of British Columbia, Canada
[2]Black Tusk Geophysics, Canada

Abstract— Electromagnetic induction (EMI) sensing has been a major protocol in environmental remediation of unexploded ordnance (UXO) contamination. Its effective use relies upon an inversion processing technique that is capable of extracting accurate target signatures (e.g., dipolar polarizabilities) from measured data for input to subsequent tasks of discriminating UXO from non-hazardous clutter.

This paper presents a new inversion method that is based upon the singular value decomposition (SVD) analysis of multiple-time channel responses. First, we use the multi-channel EMI sensor data to construct the spatial-temporal response matrix (STRM). The rows of the STRM correspond to measurements sampled at different time channels from one transmitter/receiver pair and the columns correspond to measurements sampled at the same time channel from different transmitter/receiver combinations. The SVD of the STRM gives that the left singular vectors are related to the sensor space and the right singular vectors form an orthonormal basis spanning the temporal space. If the effective rank of the STRM is r, then the first r left and right singular vectors span signal subspaces. The remaining singular vectors span the noise subspaces. Next, we do a one-sided projection by right multiplying the STRM with the temporal signal subspace matrix and obtain a transformed response matrix whose r columns are the signal subspace (SS) temporal channels. This allows us to carry out a temporal orthogonal projection inversion (TOPI) where the r SS projected temporal channels for source locations and the target polarizabilties are solved as a linear optimization problem in the original data domain.

The proposed approach is evaluated using the field data collected with different multi-chanel, mulit-static EMI sensor systems. The SVD of the STRM typically produce a rapid decay of singular values. This suggests that signals are compressible and can be represented with a low-rank approximation matrix. Our experiments show that an effective rank can be determined by finding the location of maximum curvature when plotting singular values versus their indices. Furthermore, we have found that the temporal projection generally leads to highly compressed signals whose significant components are concentrated around the first a few projected time channels. This suggests that the TOPI might be implemented by simply using the first projected temporal signals. In comparison with the usual method of using the original data, the TOPI approach demonstrates the potential for being more computationally efficient but producing more accurate results since a substantial portion of the noise in the data is winnowed from the analysis.

Speed-feedback, Direct-drive Control of a Low-speed Transverse Flux-type Motor with Large Number of Poles for Ship Propulsion

Y. Yamamoto[1], T. Nakamura[2], Y. Takada[1], T. Koseki[1], Y. Aoyama[3], and Y. Iwaji[3]

[1]The University of Tokyo, Japan
[2]West Japan Railway Company, Japan
[3]Hitachi Research Laboratory, Hitachi, Ltd., Japan

Abstract— We have designed and proposed direct-drive permanent magnet synchronous motor (PMSM) for ship main propulsion called for high torque at low speed [1]. It is necessary to increase the number of poles and decrease the pole pitch to achieve low-speed drive. So we focus on Transverse Flux-type motor which has flexibility adjusting pole pitch. On the other hand, if the number of poles in the motor is large and rated speed is low, it is difficult to obtain precise speed information due to insufficient speed information from the encoder. Thus, resolution of the speed is lost considerably in the lower speed region. As a result, stability of the system is remarkably worse as shown in Fig. 3(a). To resolve this issue, we applied Dual Sampling rate Observer (DSO) to the system [2]. The DSO is a discrete-time observer with two sampling rates. One is from encoder pulse T_1; the other is from control period T_2 of the system. The fundamental idea is to estimate the state variables of the system at every sampling period and correcting the error of estimation when an encoder pulse including real value is found. Estimation period is the same as control period so that the observer gives appropriate information to the controller at every control period. For example, when T_1 is shorter than T_2 ($T_1 < T_2$) means that it is operating at high speed, DSO is functioned as a usual discrete-time observer. The effectiveness of DSO, compared to the basic current controller and speed controller of cascade control composed

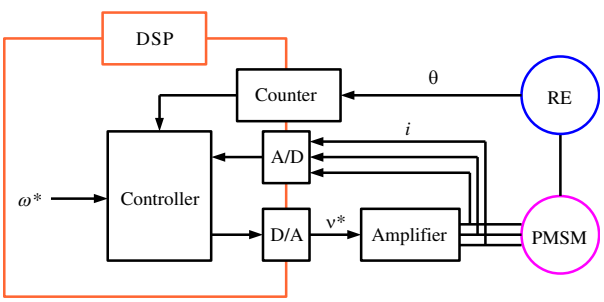

Figure 1: Configuration in motor-drive system for tests.

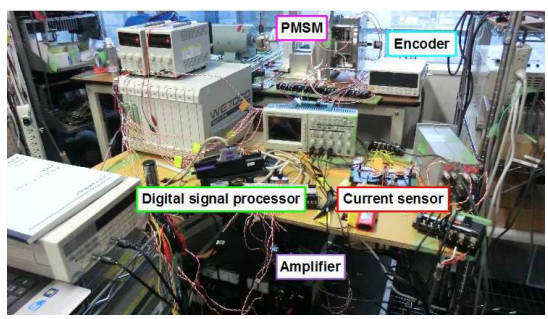

Figure 2: General view of the experiment.

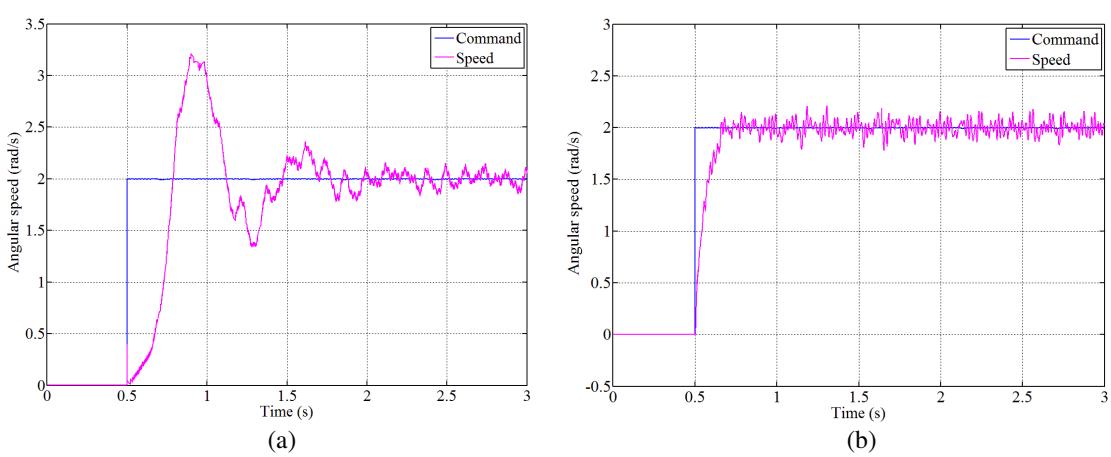

Figure 3: Comparison of the output signal for the speed in experiment with/without DSO (Reference of the angular velocity 2.0 rad/s). (a) Without DSO (Speed is calculated by inexact diffrential on position). (b) With DSO (Time constant of the observer 8.0 m/s).

of PI controllers, at low speed is confirmed through the simulations and experiments as shown in Figs. 1–3. Each gain of the controllers without DSO is decided by using Kessler method which is one of the Coefficient Diagram Methods (CDMs) to design uniformly [3]. In the full paper, the flow of decision on each gain and some experiments conducted by using another direct-drive motor such as no-load and load test will also be described in detail.

REFERENCES

1. Nakamura, T., T. Koseki, and Y. Aoyama, "A low-speed high-torque permanent magnet synchronous motor — Reducing cogging torque and eddy current loss," *The Japanese Society of Applied Electromagnetics and Mechanics*, Vol. 20, No. 2, 410–415, Jun. 2012.
2. Manabe, S., "The coefficient diagram method," *IFAC Symposium on Automatic Control in Aerospace*, 199–210, Aug. 1998.
3. Kovudhikulrungsri, L. and T. Koseki, "Precise speed estimation from a low-resolution encoder by dual-sampling-rate observer," *IEEE/ASME Transactions on Mechatronics*, Vol. 11, No. 6, Dec. 2006.